Steel security fitting prepared for profile cylinder - handle/handle SX43

Long backplate for metal frame doors with continuous screwed joint

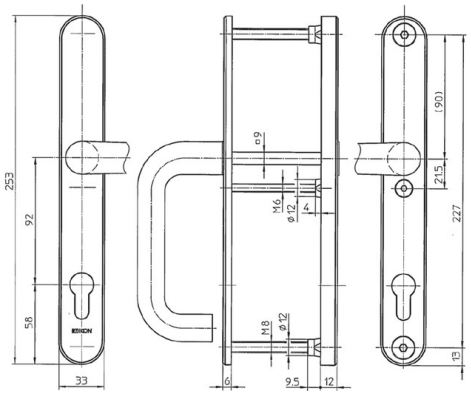

Product description

- Distance 92 mm
- Spindle 9 mm
- For cylinder projection from 10 to 15 mm
- External plate thickness 12 mm - Internal plate thickness 6 mm
- Material external plate: solid steel, hardened
- Material internal plate: solid steel
- Triple screwed joint
- Material Handle: anodised aluminium with steel core
- Handle U-shape
- Handle is supplied mounted
- With divided or undivided half spindle to operate

Scope of delivery

- 1 Set with fixing material

Variants that can be ordered

Article number	FB=	TS=
SX43	F1	40 (38-43)
	F1	50 (43-50)
	F1	55 (48-54)
	F1	60 (53-60)
	F1	65 (58-64)
	F1	70 (63-70)
	F1	75 (68-74)
	F1	80 (73-80)
	F1	85 (78-84)
	F1	90 (83-90)
	F1	95 (88-94)
	F1	100 (93-104)
	F1	110 (103-114)

Suitable ASSA ABLOY products

Order number	Product
.531	Profile-double cylinder
.551	Profile-double cylinder
.534,KNF=1	Profile-knob cylinder
.534,KNF=2	Profile-knob cylinder
.534,KNF=7	Profile-knob cylinder
.534,KNF=9	Profile-knob cylinder
.534,KNF=91	Profile-knob cylinder
.534,KNF=92	Profile-knob cylinder
.534,KNF=94	Profile-knob cylinder

ASSA ABLOY Sicherheitstechnik GmbH
Attilastraße 61-67 12105 Berlin
Tel. +4930 8106-0
www.ikon.de / berlin@assaabloy.com